# Who Invented the Non Linear Junction Detector?

Simon Hemour
*Univ. Bordeaux, IMS,*
Talence, France.
simon.hemour@u-bordeaux.fr

Paul Reuvers
*Crypto Museum,*
Eindhoven, The Netherlands.
paul@cryptomuseum.com

Marc Simons
*Crypto Museum,*
Eindhoven, The Netherlands.
marc@cryptomuseum.com

Nicolas Barbot
*Univ. Grenoble Alpes, Grenoble INP, LCIS,*
Valence, France.
nicolas.barbot@lcis.grenoble-inp.fr

***Abstract*—This paper presents an historical retrospective on the development of the nonlinear junction detector (NLJD), a device that can be used to remotely detect (hidden) objects based on their nonlinear electric behavior. After presenting the principle of the device and its architecture, the development of the nonlinear junction detector is highlighted in chronological order, and C. Bovill is acknowledged for this technological milestone. The work done in this article can be used by researchers working in the field of harmonic and intermodulation transponders and radars.**

***Index Terms*—Harmonic radar, harmonic transponder, intermodulation radar, intermodulation transponder, nonlinear junction detector, covert listening device, ZeroPower.**

## I. Introduction

Most of the objects that we perceive in the environment are linear which means that if the amplitude of an incoming wave is multiplied by a given factor, the reflected/scattered wave amplitude is also multiplied by the same factor. For example, the objects impinged by the light from a bulb can be seen by our eyes. If the amplitude of the electromagnetic wave is multiplied by two, then the electromagnetic wave received by our eye will also be multiplied by two (see Fig. 3(a)). Some objects however do not respect this simple rule. These nonlinear objects can reflect/backscatter the incident wave at the same frequency $f_0$ but also at multiples of the fundamental frequency $nf_0$. The basic principle of a nonlinear transponder and the associated detector is presented in the lower half of Fig. 1.

Different physical principles or effects can be exploited to create this nonlinear behavior, but the easiest and most efficient way to create nonlinearites (at low-amplitude) is to exploit semiconductor junctions or metal-oxide-metal junctions. Consequently, any electronic device using diodes and/or transistors is by definition a nonlinear device, and a device for detecting its presence is a nonlinear junction detector (NLJD).

The discovery of harmonic backscattering may be one of the by-products of the Second World War (WWII). The war produced large quantities of radar equipment suitable for practical use around the world by many radar operators, marking the beginning of a new microwave era for technicians, engineers and experimenters. For example, it was quickly discovered that precipitation appeared as targets on military radar displays, marking the beginning of the field of radar meteorology. It is also during this time that harmonic generation by corroded metal was first observed, and that the first harmonic detector

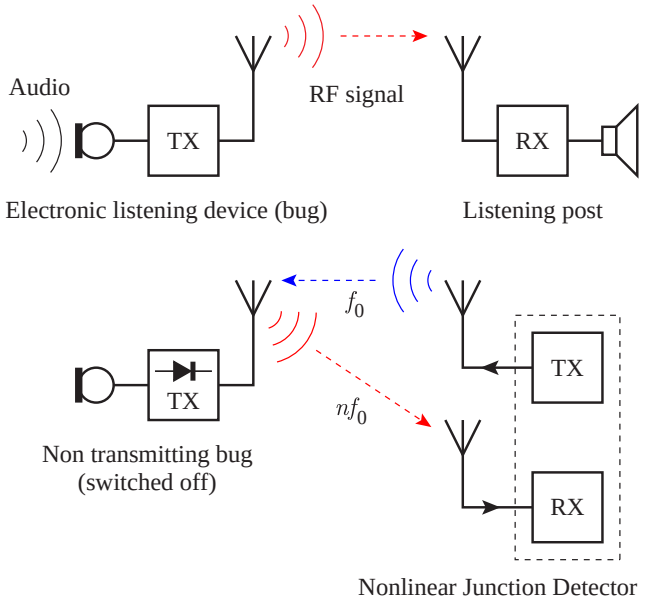


Fig. 1. Basic setup of an RF listening device (top) and basic operating principle of a nonlinear junction device (bottom)

was demonstrated [1]. The method allows one to efficiently check the integrity of an aircraft without disassembling it.

During the Cold War, the intelligence services of several countries developed small electronic devices for eavesdropping on conversations. Such a device is generally known as a covert listening device – popularly known as a "bug" – which can be wired or wireless. In the case of a wireless bug, it generally relies on a Radio Frequency (RF) signal that is modulated with the sound of a conversation in the vicinity of the device. The RF signal can carry the audio signal over long distances and can be picked up by a distant receiver. This illustrated in the upper half of Fig. 1. RF bugs can be active or passive. Active bugs are powered locally, e.g., by a battery, whilst passive bugs – using backscatter modulation – are powered from some distance by a strong RF signal. The vast majority of these devices are based on semiconductor components and can therefore be detected by measuring the harmonic signal they are passively generating through nonlinear conversion. This is illustrated in the lower half of Fig. 1. The development of NLJDs is closely related to the development of bugs and can be regarded as a cat-and-mouse game. The agencies that

develop increasingly smaller bugs, also develop increasingly sensitive countermeasures to enable them to detect such bugs.

One type of bug that should be mentioned briefly here, is "The Great Seal Bug" — popularly known as "The Thing" — a resonant cavity microphone that was hidden by the Russians in 1945 inside a wooden carving of The Great Seal of the United States and used to eavesdrop on the US Ambassador in Moscow for no less than seven years [2]. Although this passive device is excited by a remote RF signal, it is sometimes misinterpreted as an harmonic transponder due to incorrect assumptions in some publications. For example in the 2013 article "Lev Termen's Great Seal Bug Analyzed", the authors conclude that the device was probably re-radiating an harmonic of the fundamental frequency [3]. This is incorrect however, as the device does not contain any nonlinear components. Tests carried out by the authors on a replica of the Great Seal Bug have shown that the re-transmitted modulated signal is at $f_0$ only. This is confirmed by the official FBI report from 1952, which has since been released publicly [4]. Consequently, the device cannot be detected by means of an NLJD. This type of bug will be discussed further in section IV.

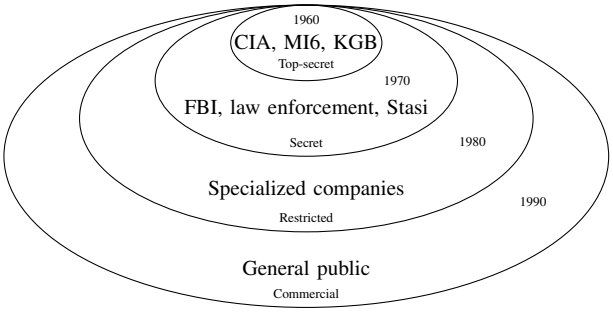


Fig. 2. Actors involved in the development of nonlinear junction detector.

Fig. 2 presents examples of possible actors and the approximate period in which they had access to NLJDs. In the 1960s, the technology was regarded top secret and was only available to a small circle of intelligence services, such as the US Central Intelligence Agency (CIA), the British MI6 and the Government Communications Headquarters (GCHQ). It is likely that in the late 1960s, Russian intelligence services like the KGB, SVR and GRU, also got access to the technology. In the 1970s, the technology was gradually shared with the intelligence services of friendly nations and with the law enforcement community, such as the US Federal Bureau of Investigation (FBI). In the 1980s, meanwhile developed by the commercial sector, the technology became available to specialized security firms.

This paper presents the retrospective of the invention of the nonlinear junction detector. After presenting the general architecture of this fantastic device, the history of the development of the nonlinear junction detector will be presented. A variety of sources has been used to write this article, including papers, patents (mainly from US origin) and interviews. The impact of this invention on our everyday life will also be addressed. The authors hope that this article will be useful for curious readers working in the field of harmonic/intermodulation transponders and radars.

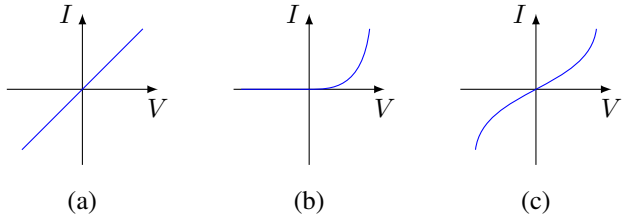


Fig. 3. (a) Linear device, (b) nonlinear device generating even harmonics, (c) nonlinear device generating odd harmonics (extracted form the manual of the SuperScout in German [5]).

## II. Principle of the Nonlinear Junction Detector

All nonlinear devices are able to generate harmonics. With some nonlinear devices, the even order harmonics dominate (see Fig. 3(b)). For example semiconductor devices based on P-N junctions (such as regular diodes and transistors) and semiconductor-metal junctions (such as Schottky diodes) are known to generate more power at $2f_0$, $4f_0$... However, metal-oxide-metal junctions (such as rusty nails) are known to generate more harmonics at $3f_0$, $5f_0$...

Based on this simple observation, a nonlinear junction detector is a device which is able to send a continuous wave at $f_0$ and measure the power present at one or more harmonics. A generic schematic of a nonlinear junction detector is presented in Fig. 4. This architecture is composed of a transmitter at $f_0$ and a receiver at $nf_0$. In some literature, the complex of transmitter and receiver is known as *harmonic reader* or *harmonic radar*. Transmitter and receiver are phase-synchronized by coupling the transmitter's signal (3), multiplying its frequency $n$ times (5) and applying it via a filter (6) to the receiver's mixer (8). Note that the use of filters in the transmission (4) and reception (7) path is a critical part of the architecture since the transmitter must generate a signal without any components at $nf_0$ to ensure a reliable detection of the harmonics generated by the target. In the same vein, the receiver must only be

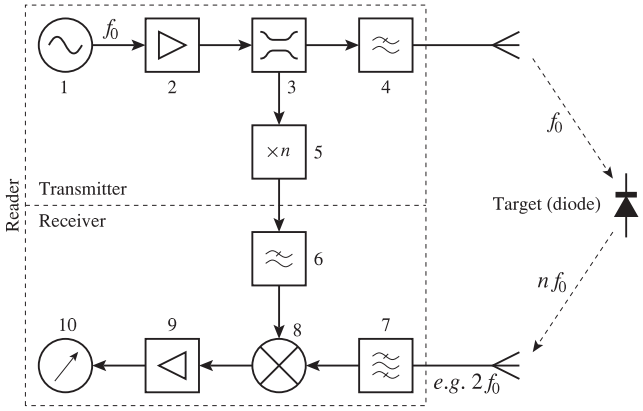


Fig. 4. Architecture of a nonlinear junction detector.

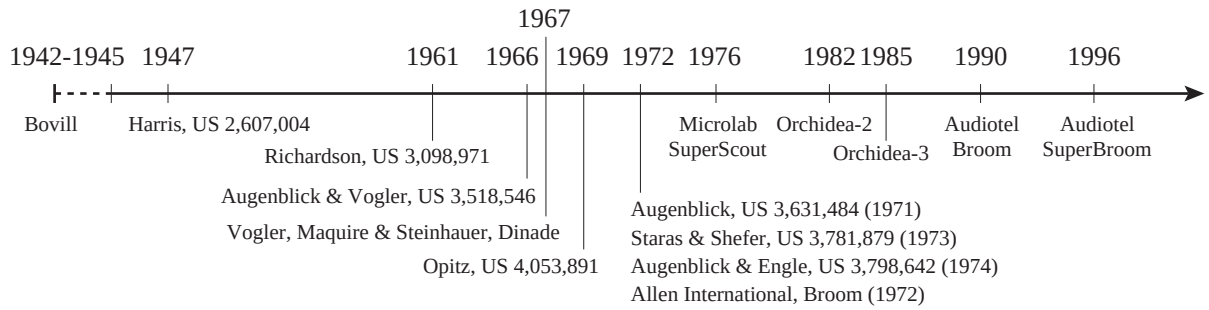


Fig. 5. Timeline of the advancement is nonlinear transponders and nonlinear junction detectors. Patent dates correspond to the patent application.

sensitive to the desired harmonic frequency. This requirement is all the more important at high power and at larger distances.

## III. Historical Development

The information described in this Section starts in 1940 and ends in 1980, and is graphically summarized in Fig. 5.

### *A. Charles Bovill*

The oldest application of harmonic RF signals known to the authors dates back to the Second World War (WWII), when Charles Bovill (11 February 1911 – 9 May 2001) used it to find corroded parts on airplanes [1], [6]. Bovill studied Radio at the University of Grenoble (France) in the late 1920s and early 1930s, and then took evening classes at the London Polytechnic (UK). He worked at His Master's Voice (HMV) (1933) and the British Air Ministry (1935), before taking up a job at Marconi (UK) in January 1938. During the war, in 1940, Marconi lent him to the Royal Air Force (RAF) Bomber and Coastal Command, where he did early work on radar. In October 1941, he got noticed by the Special Operations Executive (SOE) who sent him to France to test several new radio and radar systems used by the French resistance.

Bovill observed that, when pinging remote objects with a radar pulse, some German battleships also returned harmonics of the incident wave. He discovered that this was caused by corrosion of the rivets in the armor on the battleships. After returning to the UK in early 1942, Bovill developed a method to do the same with airplanes. The Spitfire and Hurricane aircraft that were used by the RAF had wings with metal support struts that were subject to stress and G-force. The concern was that, since airplanes were on standby all the time in the wet British climate, the metal support struts would rust and weaken the wing. When an RF signal was pinged into the wing, strong harmonics were returned when there was significant corrosion, allowing the integrity of the wings to be checked without taking them apart.

Although it was a remarkable discovery, Bovill did not register a patent for it. On the day the war ended, he was sent back to Marconi and resumed civil life. The above story is not widely covered and is only briefly mentioned on a couple of websites [1], [6] and in a few articles. Fortunately, authors Reuvers and Simons had the privilege of interviewing his lifetime friend Lee Tracey in 2013 [7]. Tracey, an inventor and former RAF pilot, worked with Bovill during the latter part of WWII, and again from 1960 onward when they both worked for the British intelligence service MI6 as experts in Technical Surveillance and Counter-Measures (TSCM). In the interview, Tracey was able to give a detailed account of Bovill's work. This is corroborated by two former colleagues who worked with both men in the 1970s and 1980s [8], [9].

At MI6, Tracey developed RF listening devices (bugs), which were becoming increasingly smaller thanks to the newly available transistor technology. At the same time, he developed methods for the detection of such devices. This led to his invention of the so-called staircase receiver in 1962. The staircase receiver was able to scan a wide frequency band (well into the GHz range) and detect an RF signal in its vicinity, in less than one second. It soon became a popular tool for "bug sweeps". However, the major drawback of this receiver is that it requires the bug to be actively sending an RF signal while searching for it. It cannot find a remote-controlled bug — widely used for example by the US Federal Bureau of Investigation (FBI) — that can be deactivated remotely when a bug sweep is suspected.

At this point, Bovill recalled the method he had used during WWII to find corrosion on aircraft, and wondered whether it could be used to find transistors as well. As transistors are semiconductors, they exhibit nonlinear behavior. His theory turned out to be correct and over the course of the following years he improved and perfected his invention. This means that in the early 1960s, intelligence services like MI6 and GCHQ had access to NLJD technology as a counter-measure against covert listening devices. In the early 1970s, both Tracey and Bovill left MI6 to commercially exploit their inventions.

### *B. Patenting and commercialization*

The first mention of exploitation of harmonic RF signals in a patent is from 1947, when Harris proposed several methods for a wireless communication system, in which the remote end is powered by means of RF energy emitted by the local end. One of the methods described in the patent relies on the harmonic signal generated by the rectifier diodes at the target [10, Column 14 Line 18].

In 1961, Richardson proposed a radio transmission system based on a passive transponder [12]. This passive transponder can harvest the energy coming from a reader at $f_0$ but can

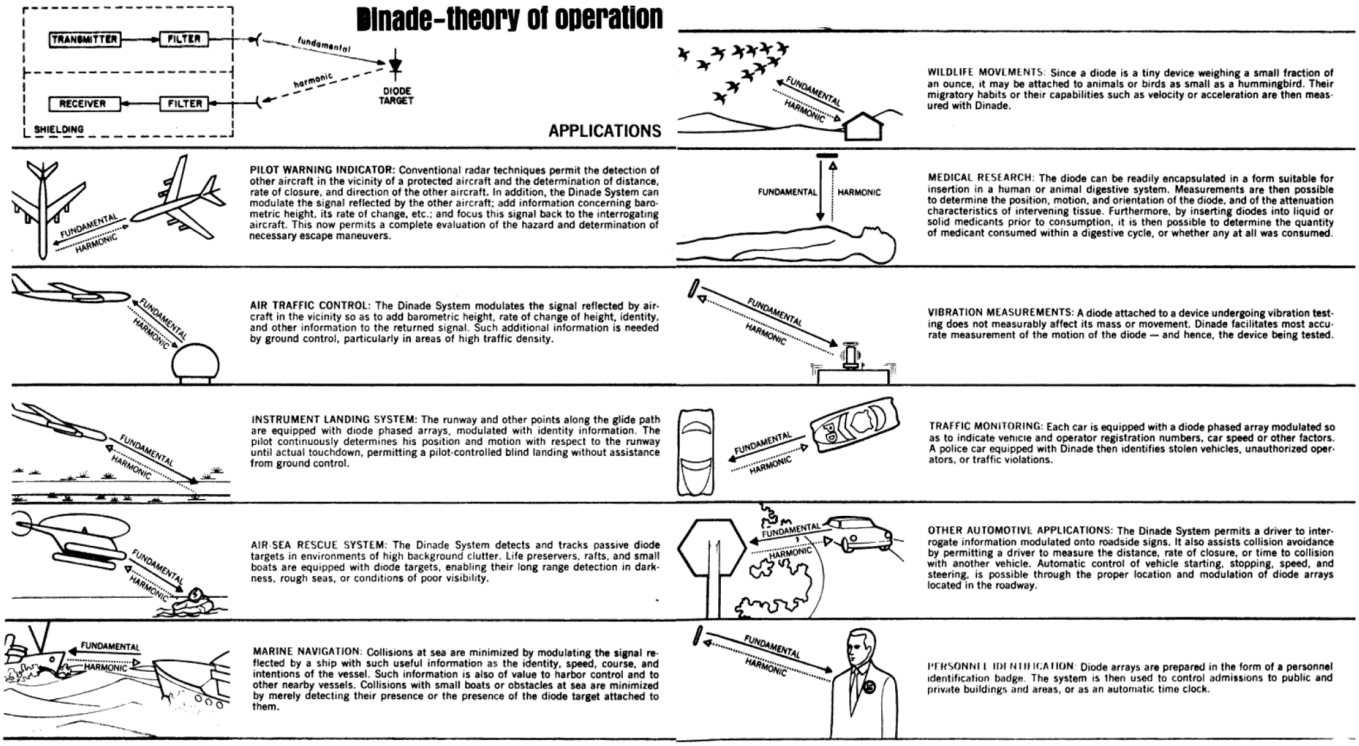


Fig. 6. Applications of the Dinade system [11].

also generate harmonics at $2f_0$ which can be backscattered by the transponder using a dual-band antenna using a cleverly designed matching circuit for both frequencies.

In 1966, Augenblick and Vogler, who were working for Microlab/FXR, filed a patent to propose the complete architecture of an harmonic system, i.e., the harmonic radar and the harmonic tag [13]. This system is able to detect the presence/absence and movement of a nonlinear transponder using the harmonics generated by the transponder. In this patent, the authors carefully address the problem of the harmonic generation at the reader side using filtering to improve isolation. The patent was granted in 1970.

Note that without awaiting the publication of the patent, Microlab/FXR published a brochure on the concept in 1967, which they called "Dinade" [11]. The document is mainly based on the claims published in the patent along with measurement data, and shows how far ahead of their time the inventors were. The applications addressed in this paper (see Fig. 6) are still in use today.

Moreover, still in 1967, a second independent patent was filed by Opitz. The patent addresses a military application to detect objects using nonlinearities found in semi-conductors and/or different metallic components [14]. The patent proposes two different approaches: by sending a continuous wave and measuring the third harmonic $3f_0$ or by sending two frequency components and measuring the intermodulation products. Thus, this patent presents the first intermodulation radar. Note that the patent was granted in 1977 (i.e., 10 years after the submission).

In 1969, a second patent from Microlab/FXR was filed [15]. This patent is an extension of [13] and describes an harmonic radar able to detect and estimate the relative speed of the transponder (and distance). The principle relies on both the nonlinearity of the device and the Doppler modulation induced during the relative displacement of the transponder from the reader. Identification of the transponder is also mentioned using a time-varying bias of the diode.

In 1972, a patent describes the use of harmonic radar and transponders in commercial applications. The patent addresses the detection of harmonic transponders in collision avoidance systems for vehicles [16]. The inventors use a cross-polarized harmonic transponder to slightly improve the isolation compared to classical harmonic systems.

That same year, a third patent of Microlab/FXR was filed. This patent presents an harmonic system in which the transponder can be identified [17]. The principle relies on both harmonic and intermodulation products. By carefully designing the matching network of the transponder, the inventors are able to generate different patterns (mainly the cutoff frequency around $2f_0$) and are thus able to identify different transponders.

Still in 1972, the first NLJD to be offered commercially, was the "Broom", sold by Allen International Ltd. in the UK [18]. It was developed by company director Charles Bovill, and used a fundamental frequency of 888 MHz. Allen International went bankrupt in 1974, but its product portfolio was taken over by Security Research Ltd., which was eventually acquired by Audiotel Ltd. in 1989.

A few years later, in 1976, Microlab/FXR introduced the "SuperScout" [5], a similar device that operates at 914 MHz. Unlike the Broom however, SuperScout has two receivers, which allows it to discriminate between the 2nd and 3rd harmonics. More precisely: it uses the ratio between the reflected $2f_0$ and $3f_0$ harmonics to disciminate between semiconductor junctions and regular oxidized objects such as a rusty nail. This greatly improved the reliability of the detection. As Microlab had registered a patent in 1969 which claims the use of both the 2nd and 3rd harmonics [15], this prevented competitors from using a similar solution until the patents had expired.

Around 1982, the Soviet Union (USSR) introduced the "Orchidea-2" [19], a device that was capable of finding wired bugs that were connected to the electrical infrastructure, such as a telephone line and the mains power network. A wired bug is usually powered by the line to which it is connected. The rectifiers in its power circuit cause nonlinear currents which can be detected by the device. Orchidea-2 was made available to the intelligence services of other Warsaw Pact countries, including the GDR (East Germany), which probably means that Russian intelligence services already had access to this technology in the 1970s.

A couple of years later, around 1985, the USSR introduced "Orchidea-3", a device for locating RF bugs [20]. Like the original Broom, it uses only the 2nd order harmonic of the incident wave. Unlike the Broom and Scout however, Orchidea-3 uses a high-power (30 W) pulsed signal for the detection of semiconductor junctions, which produces a much wider frequency spectrum. It is thought that at close range, the 30 W pulse is strong enough to destroy some of the bugs, which can be regarded as a convenient side effect when a bug remains undiscovered.

In 1990, shortly after they had acquired Security Research Ltd., Audiotel (UK) introduced the "Broom ECM" [21], which was nothing more than an improved version of the original Broom from 1972. Blocked by patents filed by its competitors, Audiotel was not allowed to make use of both the 2nd and 3rd order harmonics to improve detection reliability [15]. This changed after the existing patents had expired, after which Audiotel introduced "SuperBroom" in 1996 [22]. Many similar products from other European, US and Russian manufacturers have since appeared on the market.

## IV. Counter- and Counter-Countermeasures

An NLJD can be used as a countermeasure against covert listening devices (bugs), regardless of whether they are wired or wireless, and regardless of whether they are switched on or off. In this section we will look at methods to defeat an NLJD. In the TSCM-trade, such methods are known as Counter-Countermeasures (CCM).

A simple method to defeat an NLJD is to use a passive device based on the principle of the Great Seal Bug, mentioned in section I and shown in Fig. 7. It is basically a resonant cavity of which one end is replaced by a membrane. When the device is excited by a strong RF signal at the cavity's fundamental frequency, it reflects a weak signal at the same

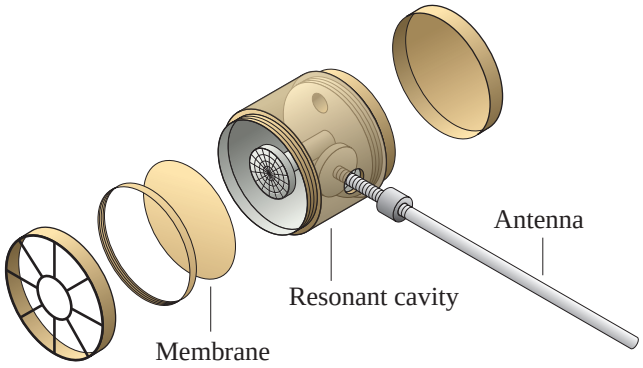


Fig. 7. Construction of the Great Seal Bug, also known as The Thing [2].

frequency, amplitude modulated with the audio picked up by the membrane [2]. As it does not contain semiconductors or any other material with nonlinear properties, it cannot be detected by an NLJD. Nevertheless, the presence of these kind of bugs can easily be detected by observing the strong RF field – the 'illumination' beam – that is required to activate it.

Another example of an effective CCM is the STR-107, a sophisticated difficult-to-detect RF bug developed in 1973 by the Dutch Radar Laboratory (NRP) for the US Central Intelligence Agency (CIA) [23]. The SRT-107 has an integrated isolator, as a result of which it is virtually invisible to the environment (see Fig. 8). An isolator, also known as a 3-port circulator, is a device that directs the RF signal applied to one of its ports to the next port (in the direction of the arrow). In the case of the SRT-107, it allows the RF signal from the bug to reach the antenna, while directing the incident wave from the NLJD to ground. As a result, the signal from the NLJD will not reach the semiconductors of the bug. Consequently, the bug will not reflect any harmonic signals. Since the development of the SRT-107 took several years, it is clear that in the late 1960s, the CIA assumed that its adversaries had access to NLJD technology, or at least expected them to have such technology in the nearby future.

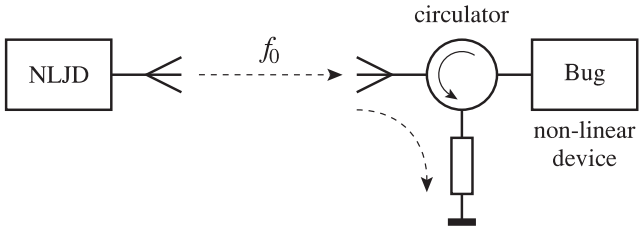


Fig. 8. The use of a circulator as a countermeasure against an NLJD.

An example of a less sophisticated but nevertheless highly effective counter-countermeasure was given in the late 1970s by the Soviet Union (USSR). In the mid-1970s it had become clear to the US that their Moscow Embassy was riddled with bugs. Security experts flown in from the US had discovered a wide variety of listening devices in the walls, the chimneys and even in the typewriters [24]. As it was thought to be impossible to clear the embassy off all bugs, it was decided

to build a completely new one elsewhere in Moscow. For unknown reasons however, the Americans hired local Russian construction workers to do the job, which eventually turned out to be a very bad decision [25]. Construction of the new premises began in 1979, but was halted in 1985 after US experts had determined that the building had been seriously compromised by the Russian intelligence service KGB. Apart from the many microphones, transmitters and antennas that were discovered, the Soviets had thrown thousands of diodes and other junk into the concrete, with the aim to obfuscate NLJDs and metal detectors. The building was abandoned and left in unfinished state for the next seven years. After the collapse of the Soviet Union in 1991, the Russians revealed which techniques they had used. The Americans subsequently decided to finish the construction with American workers and at the same time rebuild the upper two floors, where most of the intelligence bearing equipment would be located. The new American Embassy was finally opened in 2000.

## V. Civil/Commercial applications

In the late 1970s, Magnus Granhed and Bengt Enander, explored the possibility of detecting and locating skiers buried by snow after an avalanche. They developed a prototype of a passive nonlinear transponder (antenna and diode) optimized to backscatter as much 2nd harmonic power as possible from a single tone, and capable of operating under varying snow condition (from powder snow with low moisture content – typically 4–7% water content – to wet snow and ice). The first patent was filed in the US in 1982 [26]. They also developed an associated portable monostatic reader. Marketed in 1983, the first version weighed 16 kg and had a few meters of detection range, the challenge being similar to "standing near airplane engines during take-off and still trying to hear the rustle of dead leaves swept by the wind". Later improvements enabled a portable reader to reach 1.6 kg and up to 200 m range. Today, the reader is deployed as a handheld detector to locate a person buried by snow, and as a helicopter-mounted detector to search for a missing person outdoors. They are used worldwide by nearly 1000 ski resorts and mountain rescue organizations. Rescue operations also involve the use of regular radar systems, which provides them with speed and distance information.

Interestingly, there is a field where NLJD technology has become instrumental, which was accurately foreseen by the Dinade inventors. In the field of entomology, a researcher needs a tool to study and monitor the movement of insects in their natural environments [27]–[29]. Unlike conventional radio transmitters, which require batteries and are often too heavy for small flying insects to carry, harmonic radar (as the technology is called in this field) uses lightweight, passive transponders that do not need a power source. They basically consist of just an antenna and a diode (see Fig. 9). Conventional radar cannot be used because the reflected signal from the insect would be indistinguishable from background clutter, and therefore unsuitable for precise tracking. The application of harmonic radar in combination with Doppler, allows the development of robust tracking systems that operate reliably in complex environments, including forests, urban areas, and uneven terrain where the Global Positioning System (GPS) fails or optical tracking becomes impractical.

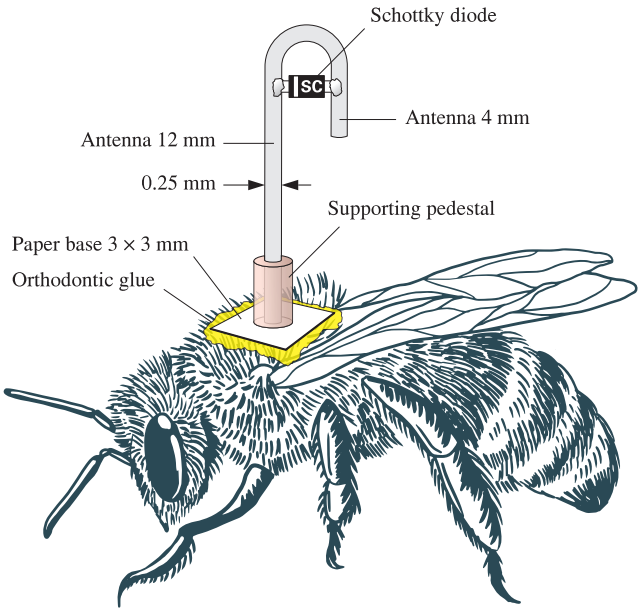


Fig. 9. Insect with nonlinear transponder glued to its back. Image created by the authors, based on descriptions in [29].

Since the transponders are extremely small and lightweight, they can be safely attached to a wide range of insects, including bees, hornets, and moths, without significantly affecting their natural behavior. This enables researchers to monitor insect flight paths in real time, revealing critical information about foraging patterns, nesting behavior, and movement across landscapes. Harmonic radar is especially useful in complex or cluttered environments, such as forests, hills, or urban areas. One of its most important applications is the monitoring of pollinators, whose activity directly affects ecosystems and agricultural productivity.

## VI. Conclusion

In this paper we have presented a global description of a nonlinear junction detector (NLJD) and the associated harmonic transponder (the target), as well a number of real-life applications. We have addressed the persistent misunderstanding that the Great Seal Bug is a harmonic transponder, and have shown that it can actually be used as a countermeasure against an NLJD. We have also presented the most important historical developments in relation to the NLJD in chronological order.

It should be noted that generally speaking, the intelligence community has access to specific new technologies, several years before such technologies become available to the general public, and that these services are not bound by any patent restrictions. It is entirely possible that the US and the UK developed NLJD technology completely independently, more or less at the same time. However, given the close relationship

between the British and American services, it seems likely that the technology was shared at some point. There is hardly any information about the developments in the former USSR, but from the production dates of the surviving equipment, it seems fair to conclude that they were lacking behind by several years.

Secrecy is fundamental to the intelligence community. As a result, no document in the literature provides a formal assessment of who invented the Non-Linear Junction Detector. However, it is possible to track down two lines of corroborating evidence: one in North America and one in Europe.

On the one hand, the first harmonic measurements were published in 1967 by the US company Microlab/FXR. When taking into account the US patents from other inventors on harmonic detection in the 1960s, the introduction of isolator technology to counter the NLJD in CIA bugs in early 1970, and the fact that Microlab/FXR later commercialized an NLJD, it seems reasonable to assume that the company developed a Non-Linear Junction Detector for the US intelligence community in the second half of the 1960s.

On the other hand, multiple sources report that UK engineer Charles Bovill developed harmonic detectors to identify corrosion-based nonlinearities during WWII. From contemporary eyewitnesses it is known that he adapted his invention in the 1960s to discover covert listening devices (bugs), whilst working for British intelligence service MI6. He also introduced the first commercially available NLJD for bug detection in 1972. Based on the current knowledge, the authors therefore propose to recognize Charles Bovill as a significant contributor – and probably the inventor – of the harmonic detector and the nonlinear junction detector.

## REFERENCES


[1] P. Reuvers and M. Simons. Charles Bovill. [Online]. Available: https://www.cryptomuseum.com/people/bovill/charles.htm

[2] ——. The Thing (The Great Seal Bug). [Online]. Available: https://www.cryptomuseum.com/covert/bugs/thing

[3] G. Brooker and J. Gomez, "Lev Termen's great seal bug analyzed," *IEEE Aerospace and Electronic Systems Magazine*, vol. 28, no. 11, pp. 4–11, 2013.

[4] FBI Laboratory. Drawing and Photographs, Russian Resonant Cavity Microphone. 1 December 1952 (Declassified 24 April 2019). [Online]. Available: https://www.cryptomuseum.com/covert/bugs/thing/files/GREAT_SEAL_BUG.pdf

[5] P. Reuvers and M. Simons. SuperScout. [Online]. Available: https://www.cryptomuseum.com/df/microlab/superscout/

[6] ——, "Interview with Lee Tracey," 23 May 2013.

[7] ——. Lee Tracey. [Online]. Available: https://www.cryptomuseum.com/people/tracey/lee.htm

[8] Dean La-Vey, "TSCM Legends," *Intersec*, pp. 36–38, January 2022.

[9] Ian <anonymous>, "Personal correspondence," 22 February 2025.

[10] D. B. Harris, "Radio transmission system," U.S. Patent 2,607,004, Aug. 12, 1952, filed in 1947.

[11] J. Vogler, D. Maquire, and A. Steinhauer, "Dinade—a new interrogation, navigation and detection system," *Microw. J*, vol. 10, no. 4, pp. 2–6, 1967.

[12] R. M. Richardson, "Remotely actuated radio frequency powered devices," U.S. Patent 3,098,971, Jul. 23, 1963, filed in 1961.

[13] H. A. Augenblick and J. G. Vogler, "Harmonic communication and navigation system," U.S. Patent 3,518,546, Jun. 30, 1970, filed in 1966.

[14] C. L. Opitz, "Radar object detector using non-linearities," U.S. Patent 4,053,891, Oct. 11, 1977, filed in 1967.

[15] H. A. Augenblick, "Harmonic detection system," U.S. Patent 3,631,484, Dec. 28, 1971, filed in 1969.

[16] H. Staras and J. Shefer, "Harmonic radar detecting and ranging system for automotive vehicles," U.S. Patent 3,781,879, Dec. 25, 1973, filed in 1972.

[17] H. Augenblick and W. Engle, "Recognition system," U.S. Patent 3,798,642, Mar. 19, 1974, filed in 1969.

[18] P. Reuvers and M. Simons. Audiotel Broom. [Online]. Available: https://www.cryptomuseum.com/df/scanlock/broom/

[19] ——. Orchidea-2. [Online]. Available: https://www.cryptomuseum.com/df/orchidea-2/index.htm

[20] ——. Orchidea-3. [Online]. Available: https://www.cryptomuseum.com/df/orchidea-3/index.htm

[21] ——. Scanlock Broom ECM. [Online]. Available: https://www.cryptomuseum.com/df/scanlock/broom/

[22] ——. SuperBroom. [Online]. Available: https://www.cryptomuseum.com/df/scanlock/superbroom/

[23] ——. SRT-107. [Online]. Available: https://www.cryptomuseum.com/covert/bugs/ec/srt107/index.htm

[24] ——. TSCM. [Online]. Available: https://www.cryptomuseum.com/df/tscm.htm

[25] P. Grier, "Cleaning the bug house," *AIR FORCE Magazine*, pp. 98–102, Sep. 2012.

[26] B. Enander, P. Fuks, and G. Larsson, "Transponder for use in locating avalanche victimes," U.S. Patent 4,331,957, May 25, 1982, filed in 1980.

[27] B. Colpitts and G. Boiteau, "Harmonic radar transceiver design: miniature tags for insect tracking," *IEEE Transactions on Antennas and Propagation*, vol. 52, no. 11, pp. 2825–2832, Nov. 2004.

[28] R. Maggiora, M. Saccani, D. Milanesio, and M. Porporato, "An innovative harmonic radar to track flying insects: The case of vespa velutina," *Scientific reports*, vol. 9, no. 1, p. 11964, 2019.

[29] A. Lavrenko, B. Litchfield, G. Woodward, and S. Pawson, "Design and evaluation of a compact harmonic transponder for insect tracking," *IEEE Microwave and Wireless Components Letters*, vol. 30, no. 4, pp. 445–448, Apr. 2020.