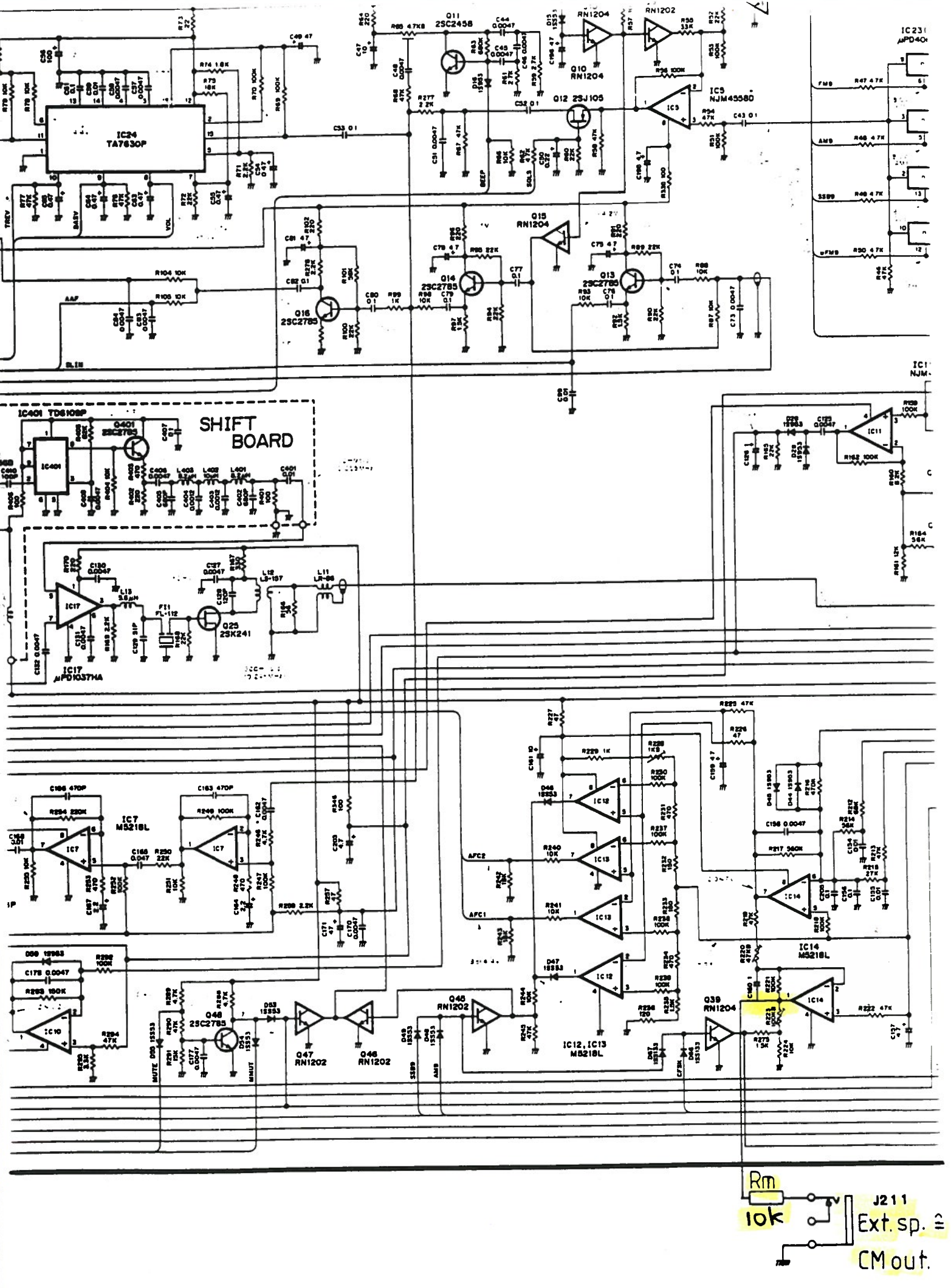
IC24
TA7630P
IC401 TD6109P
SHIFT
BOARD
IC17
μPD1037HA
IC7
M5218L
IC12, IC13
M5218L
IC14
M5218L
IC5
NJM4558D
Q11
2SC2458
Q12 2SJ105
Q10
RN1204
Q15
RN1204
Q14
2SC2785
Q13
2SC2785
Q16
2SC2785
Q25
2SK241
Q48
2SC2785
Q47
RN1202
Q46
RN1202
Q45
RN1202
Q39
RN1204
Rm
10k
J211
Ext. sp.
CM out.

FIG 3

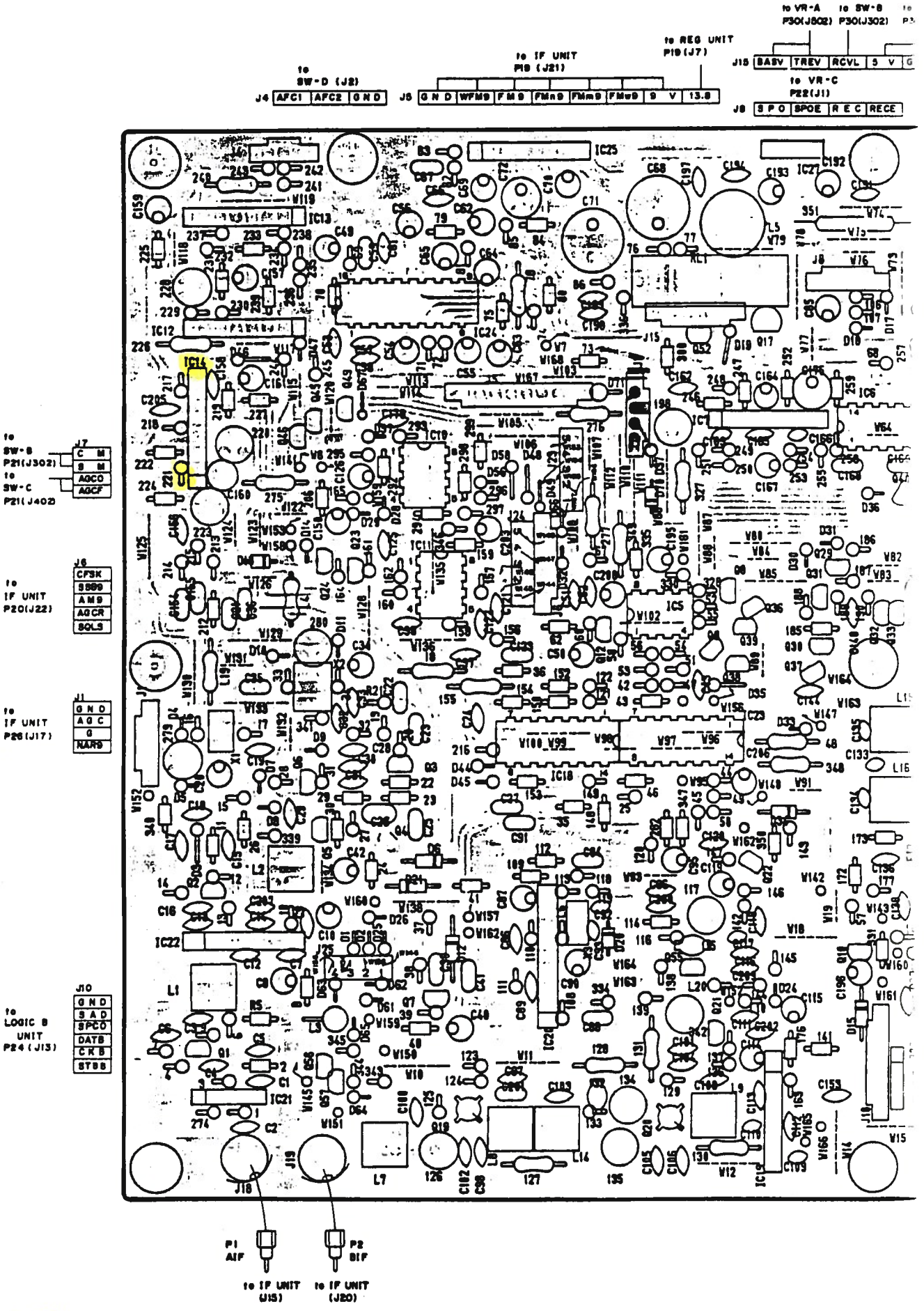
to VR-A P30(J302)
to SW-B P30(J302)
to REG UNIT P19(J7)
J15 BASV TREV RCVL 5 V G
to VR-C P22(J1)
J8 SPO SPOE REC RECE
to IF UNIT P19 (J21)
J5 GND WFMD FMD FMnD FMmD FMuD 9 V 13.8
to SW-D (J2)
J4 AFC1 AFC2 GND
to SW-B P21(J302)
to SW-C P21(J402)
J7 C M B M AGCO AGCF
to IF UNIT P20(J22)
J6 CFSK SBDD AMD AGCR SQLS
to IF UNIT P26(J17)
J1 GND AGC G NARS
to LOGIC B UNIT P24(J13)
J10 GND SAD SPCO DATB CKB STBB
P1 AIF
P2 DIF
to IF UNIT (J15)
to IF UNIT (J20)

FIG 2